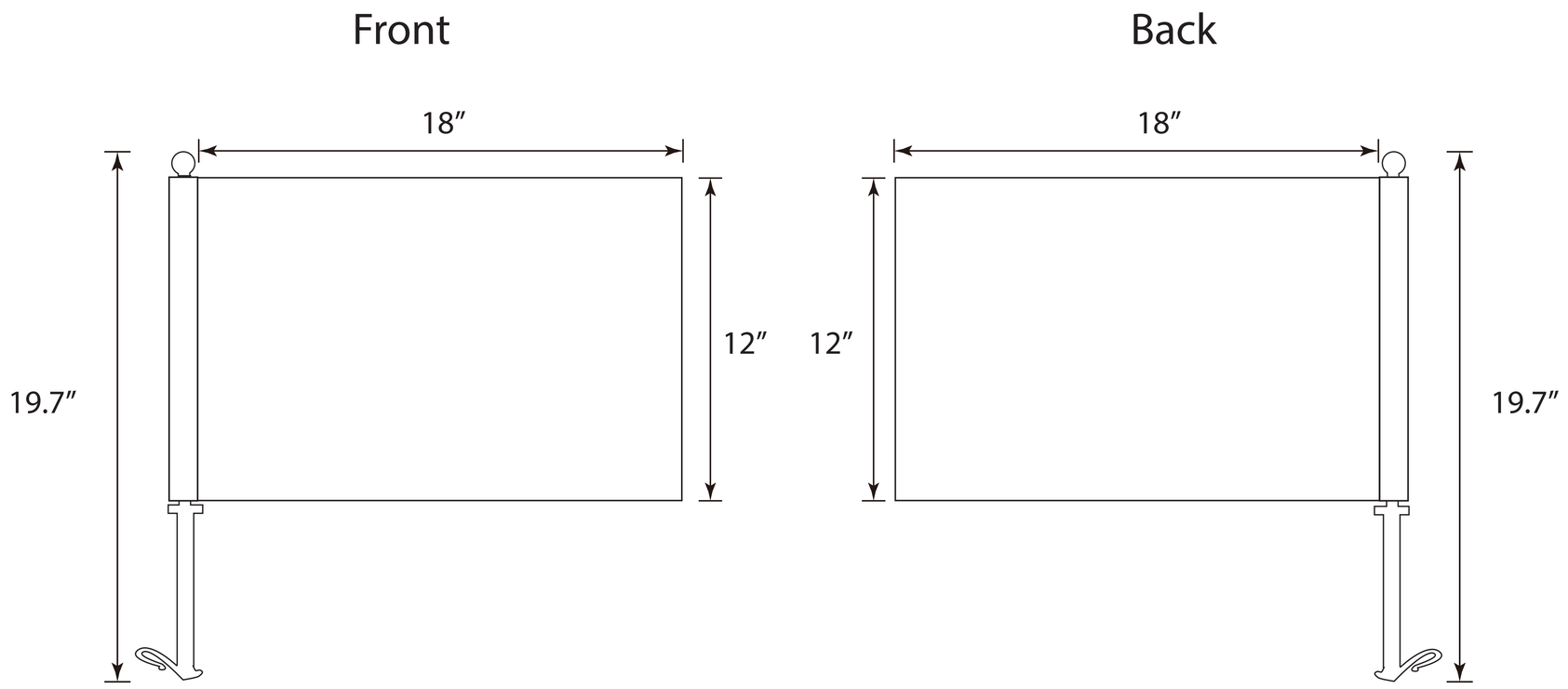Premium Car Flag-Double